1	2	3	4	5	6	7	8	9	10

AIRBLAST
BAE PORTSMOUTH
SPRAY BOOTH

AAC Technical Services Ltd
Unit 2, Brunel Business Court
Brunel Way, Thetford, Norfolk IP24 1HP

SPRAY BOOTH
Cover page

REV.	DATE	NAME	CHANGES
0	21/09/2026	TW	

REVISION 0

SCHEME 01

CONTRACT: AIRBLAST - BAE PORTSMOUTH - PAINTBOOTH PMR 2643

LOCATION: Main electrical closet

User data 1

User data 2

1-SPRAY BOOTH

Drawing	Description	Function	Location	Revision	Date	Created by
01	Cover page	=F1	+L1	0	21/09/2026	TW
02	Drawings list	=F1	+L1	0	21/09/2026	TW
03	POWER DISTRIBUTION	=F1	+L1	0	21/09/2026	TW
04	24V DISTRIBUTION	=F1	+L1	0	21/09/2026	TW
05	SAFETY CIRCUIT	=F1	+L1	0	21/09/2026	TW
06	FAN POWER	=F1	+L1	0	21/09/2026	TW
07	BURNER CONNECTIONS	=F1	+L1	0	21/09/2026	TW
08	DAMPER CONNECTIONS	=F1	+L1	0	21/09/2026	TW
09	BOOTH LIGHTS	=F1	+L1	0	21/09/2026	TW
10	ETHERNET AND PLC CONFIGURATION	=F1	+L1	0	21/09/2026	TW
11	CPU INPUTS - 1	=F1	+L1	0	21/09/2026	TW
12	CPU INPUTS - 2	=F1	+L1	0	21/09/2026	TW
13	CPU OUTPUTS	=F1	+L1	0	21/09/2026	TW
14	ANALOGUE INPUTS	=F1	+L1	0	21/09/2026	TW
15	ANALOGUE OUTPUTS - 1	=F1	+L1	0	21/09/2026	TW
16	ANALOGUE OUTPUTS - 2	=F1	+L1	0	21/09/2026	TW

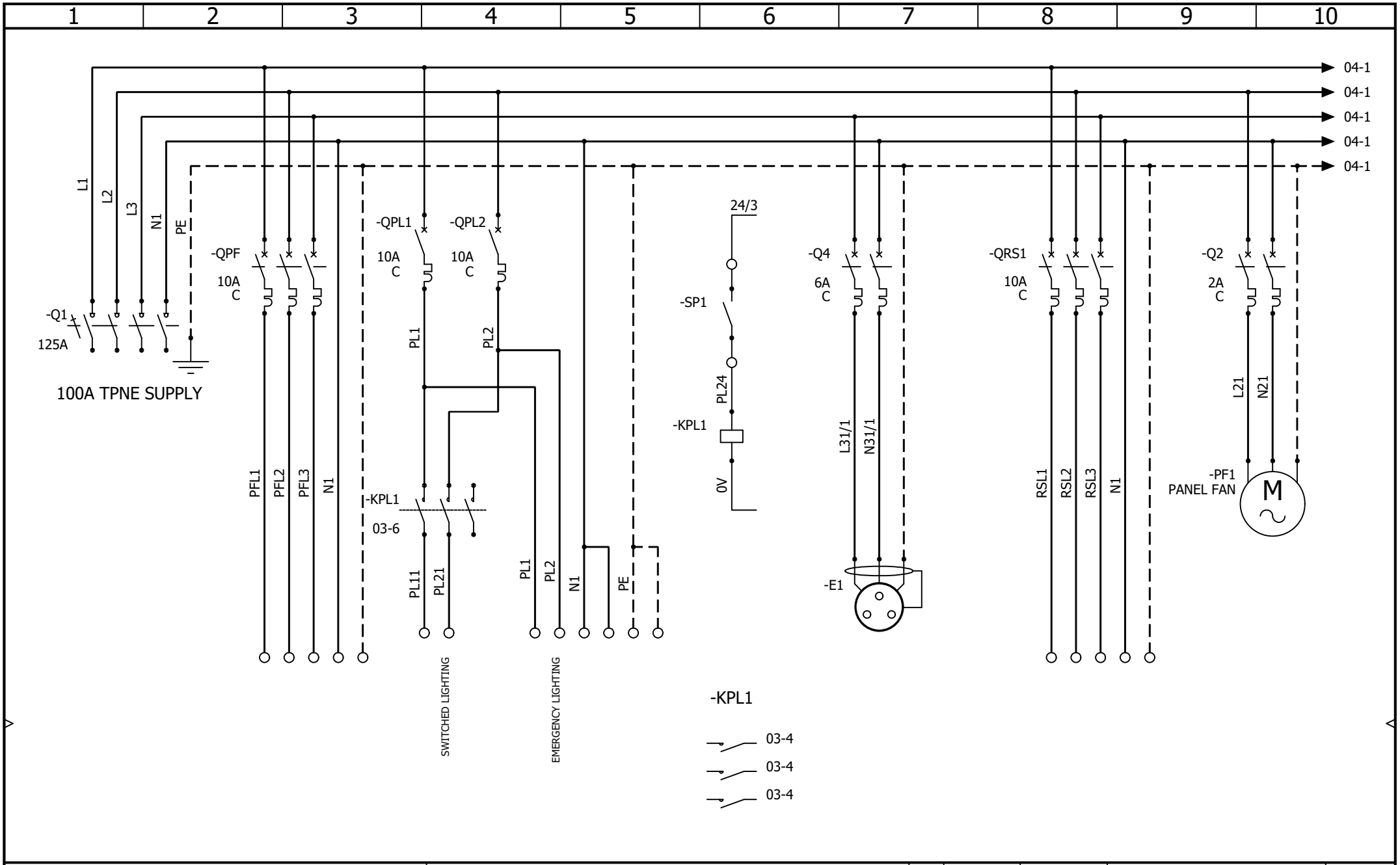

AAC Technical Services Ltd
Unit 2, Brunel Business Court
Brunel Way, Thetford, Norfolk IP24 1HP

SPRAY BOOTH
POWER DISTRIBUTION

REV.	DATE	NAME	CHANGES
0	21/09/2026	TW	

User data 1

User data 2

REVISION 0

SCHEME 03

CONTRACT: AIRBLAST - BAE PORTSMOUTH - PAINTBOOTH PMR 26431

LOCATION: Main electrical closet

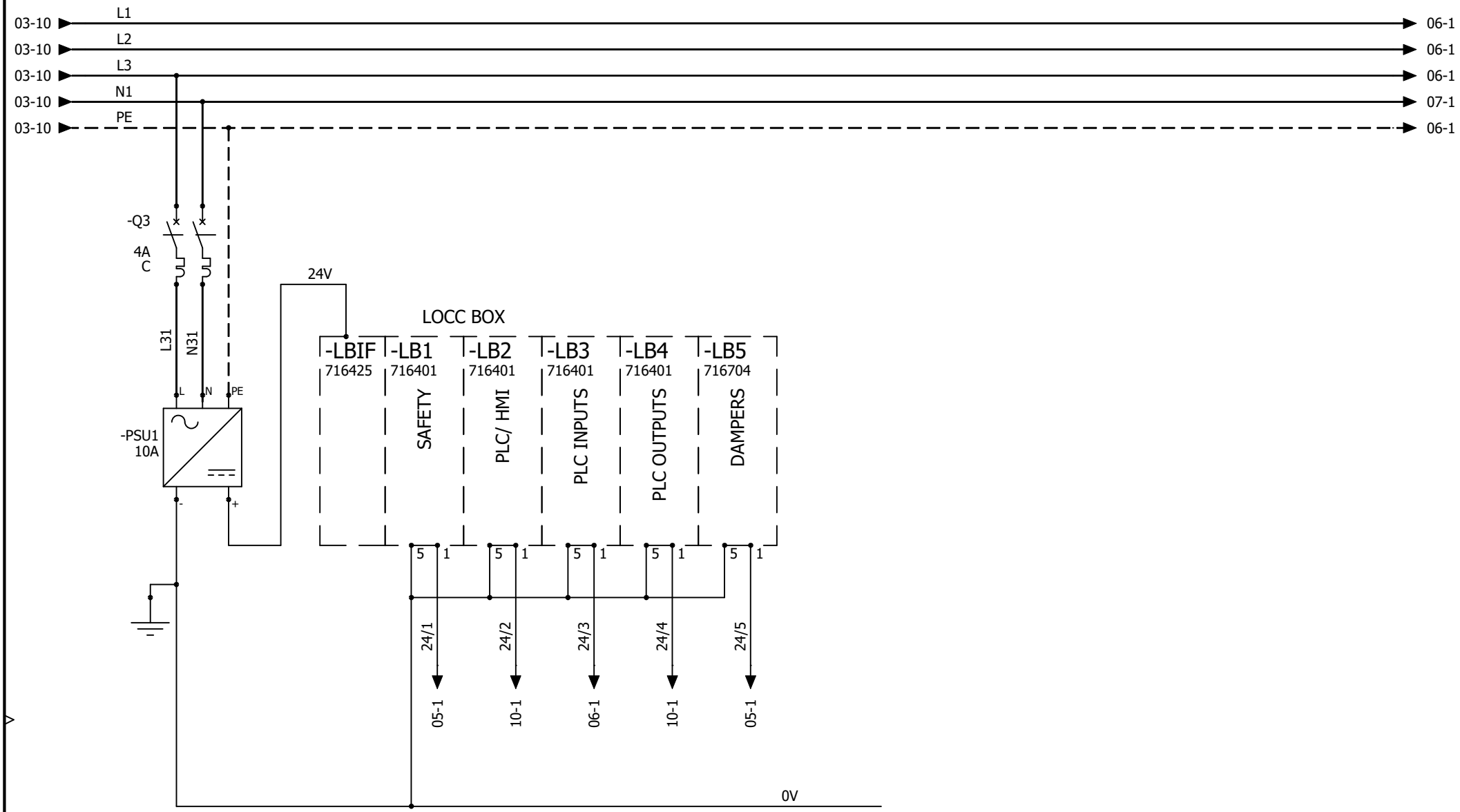

AAC Technical Services Ltd
Unit 2, Brunel Business Court
Brunel Way, Thetford, Norfolk IP24 1HP

SPRAY BOOTH
24V DISTRIBUTION

REV.	DATE	NAME	CHANGES
0	21/09/2026	TW	

REVISION 0
SCHEME 04

CONTRACT: AIRBLAST - BAE PORTSMOUTH - PAINTBOOTH PMR 26431
LOCATION: Main electrical closet
User data 1
User data 2

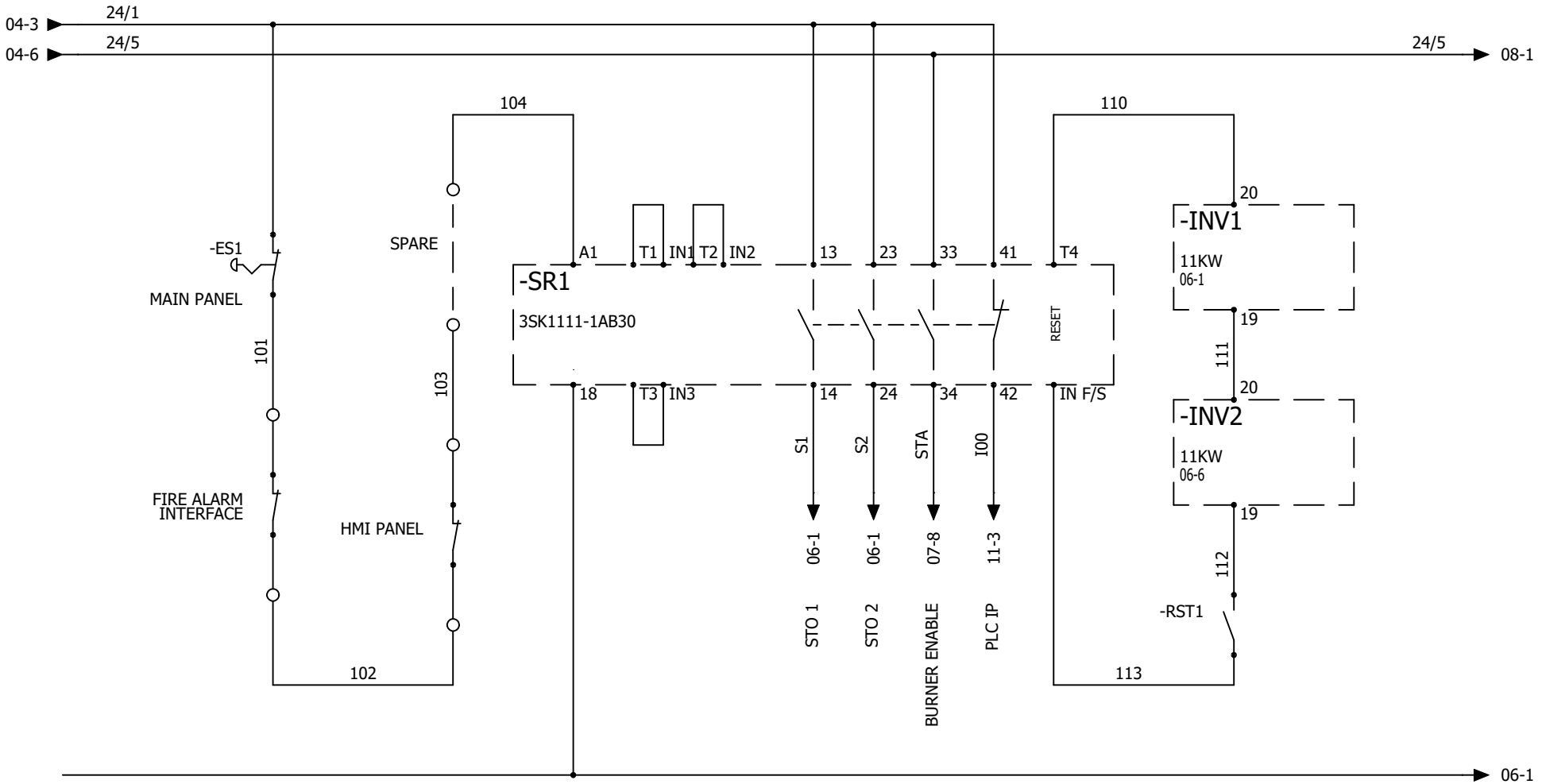

1	2	3	4	5	6	7	8	9	10

AAC Technical Services Ltd
Unit 2, Brunel Business Court
Brunel Way, Thetford, Norfolk IP24 1HP

SPRAY BOOTH
SAFETY CIRCUIT

REV.	DATE	NAME	CHANGES
0	21/09/2026	TW	

REVISION 0
SCHEME 05

CONTRACT: AIRBLAST - BAE PORTSMOUTH - PAINTBOOTH PMR 26431
LOCATION: Main electrical closet
User data 1
User data 2

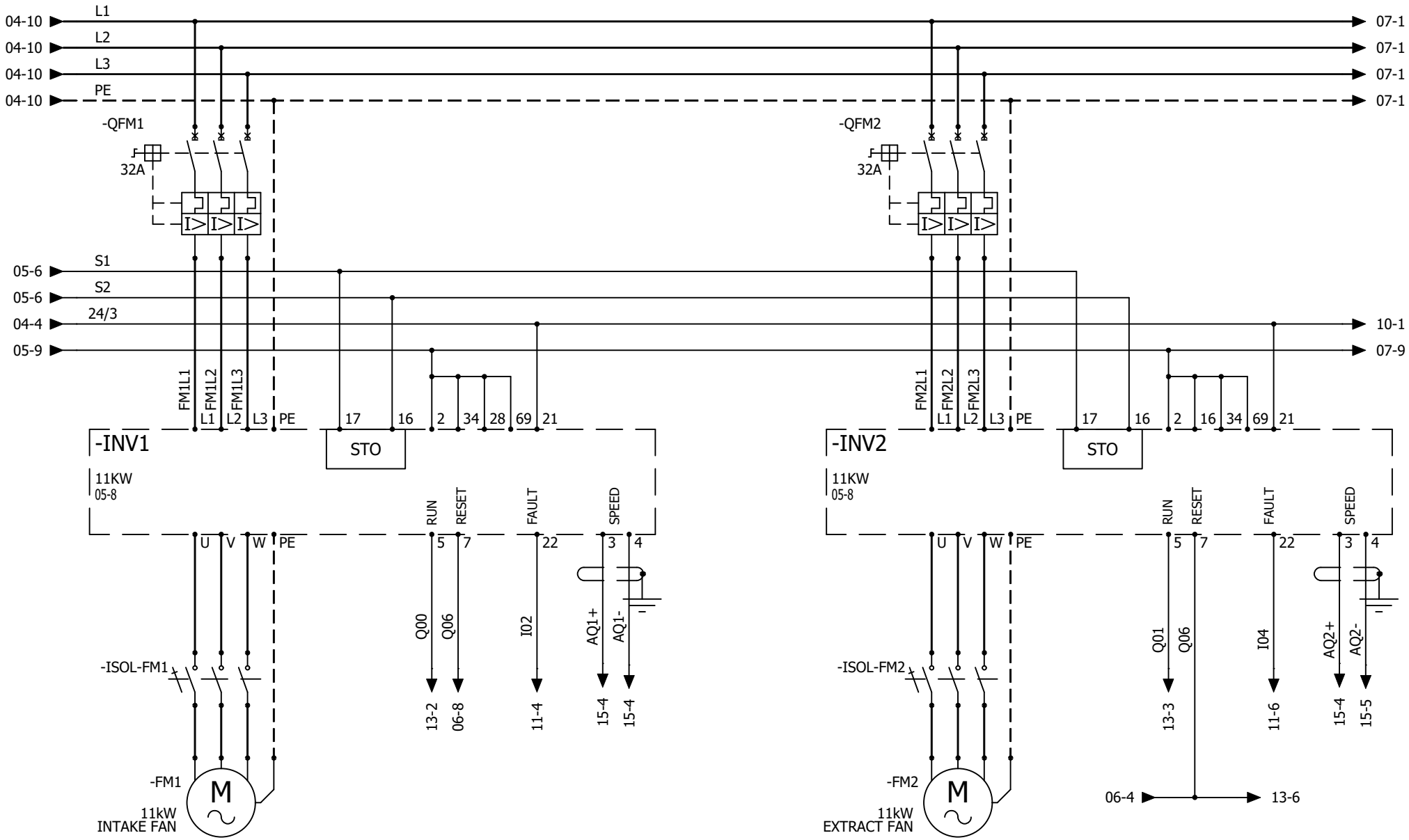

AAC Technical Services Ltd
Unit 2, Brunel Business Court
Brunel Way, Thetford, Norfolk IP24 1HP

SPRAY BOOTH
FAN POWER

REV.	DATE	NAME	CHANGES
0	21/09/2026	TW	

User data 1

User data 2

REVISION 0

SCHEME 06

CONTRACT: AIRBLAST - BAE PORTSMOUTH - PAINTBOOTH PMR 26431

LOCATION: Main electrical closet

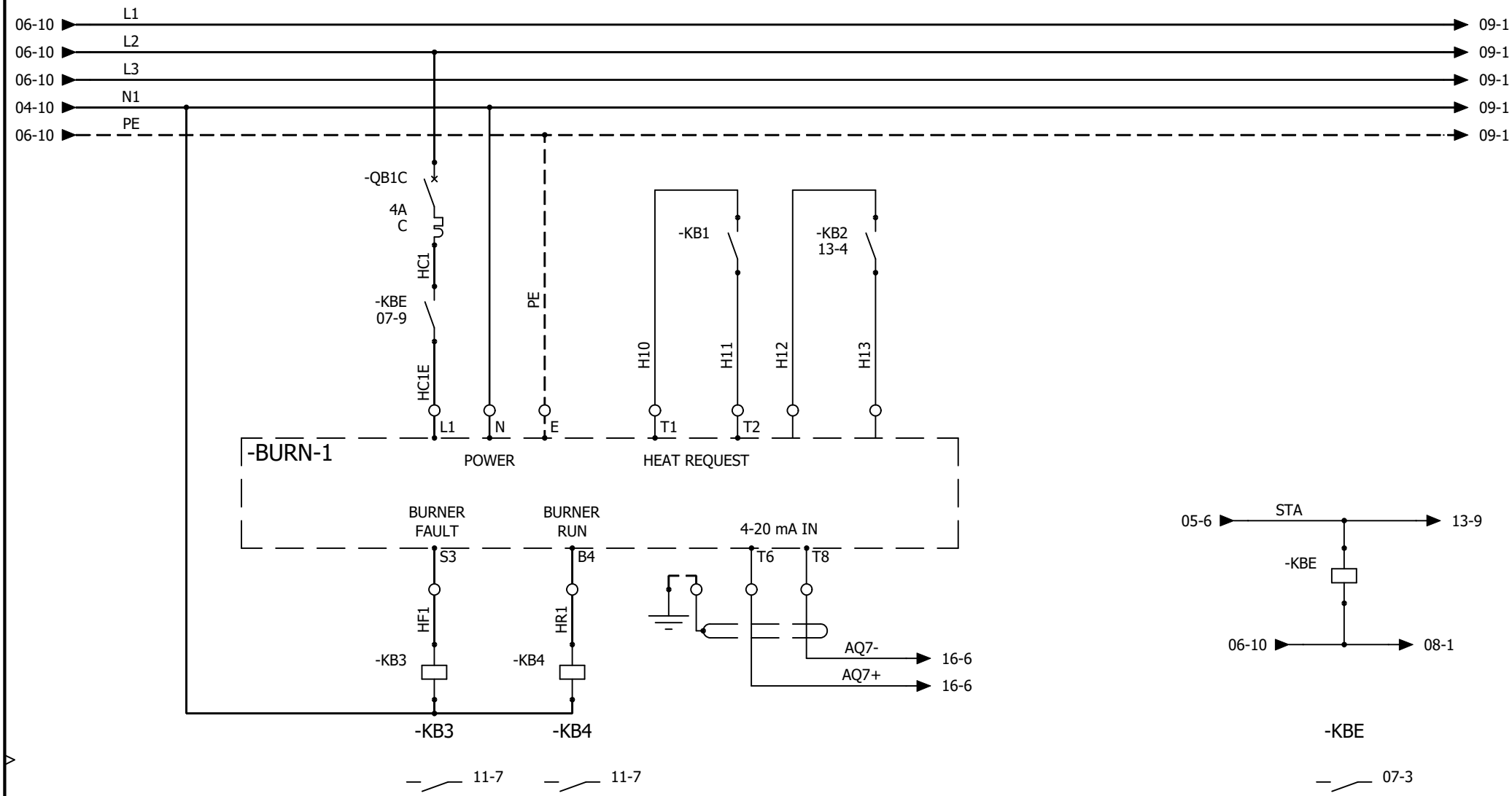

AAC Technical Services Ltd
Unit 2, Brunel Business Court
Brunel Way, Thetford, Norfolk IP24 1HP

SPRAY BOOTH
BURNER CONNECTIONS

REV.	DATE	NAME	CHANGES
0	21/09/2026	TW	

REVISION 0
SCHEME 07

CONTRACT: AIRBLAST - BAE PORTSMOUTH - PAINTBOOTH PMR 26431
LOCATION: Main electrical closet
User data 1
User data 2

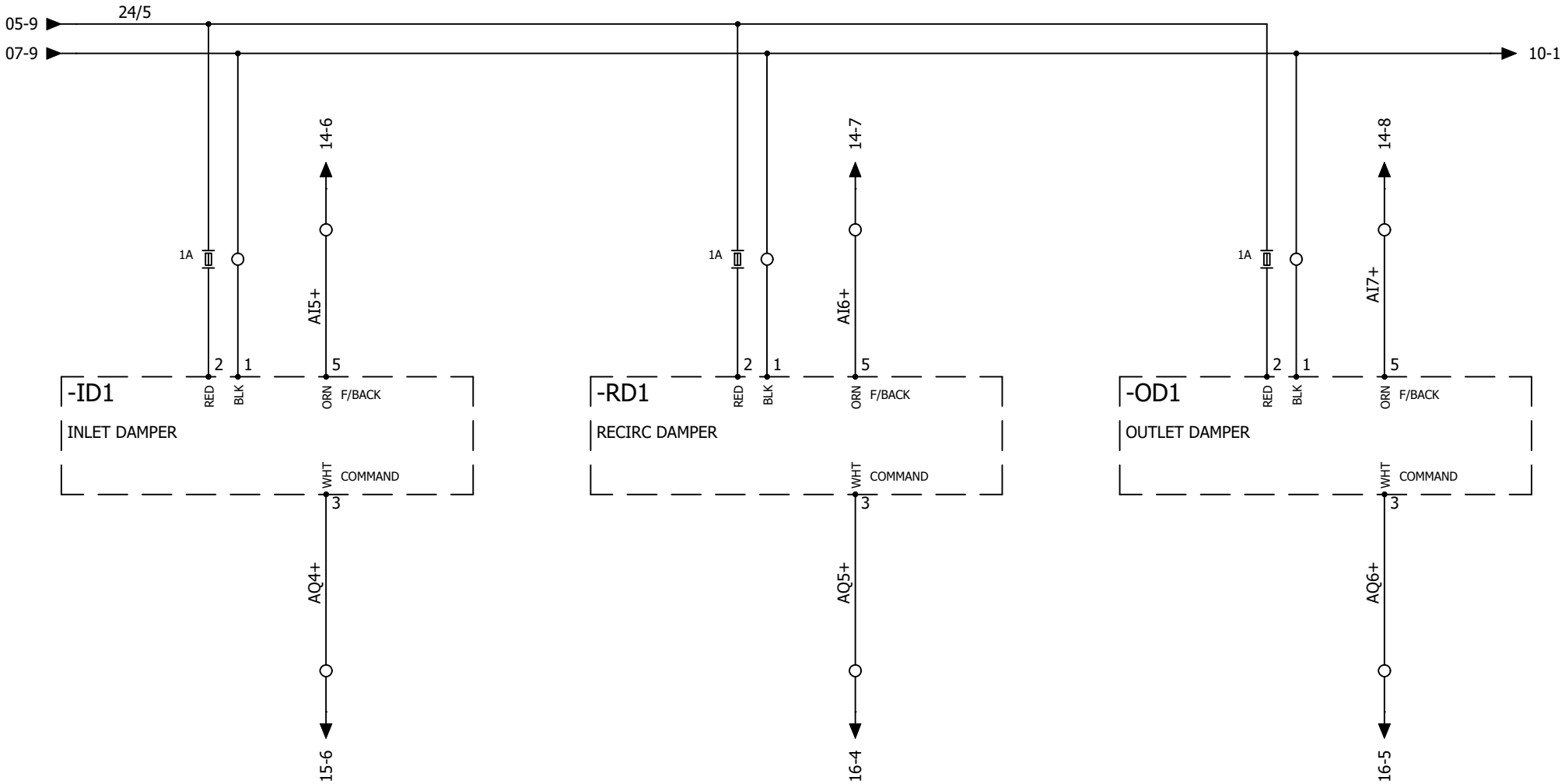

AAC Technical Services Ltd
Unit 2, Brunel Business Court
Brunel Way, Thetford, Norfolk IP24 1HP

SPRAY BOOTH
DAMPER CONNECTIONS

REV.	DATE	NAME	CHANGES
0	21/09/2026	TW	

CONTRACT: AIRBLAST - BAE PORTSMOUTH - PAINTBOOTH PMR 2643

LOCATION: Main electrical closet

User data 1

User data 2

REVISION 0

SCHEME 08

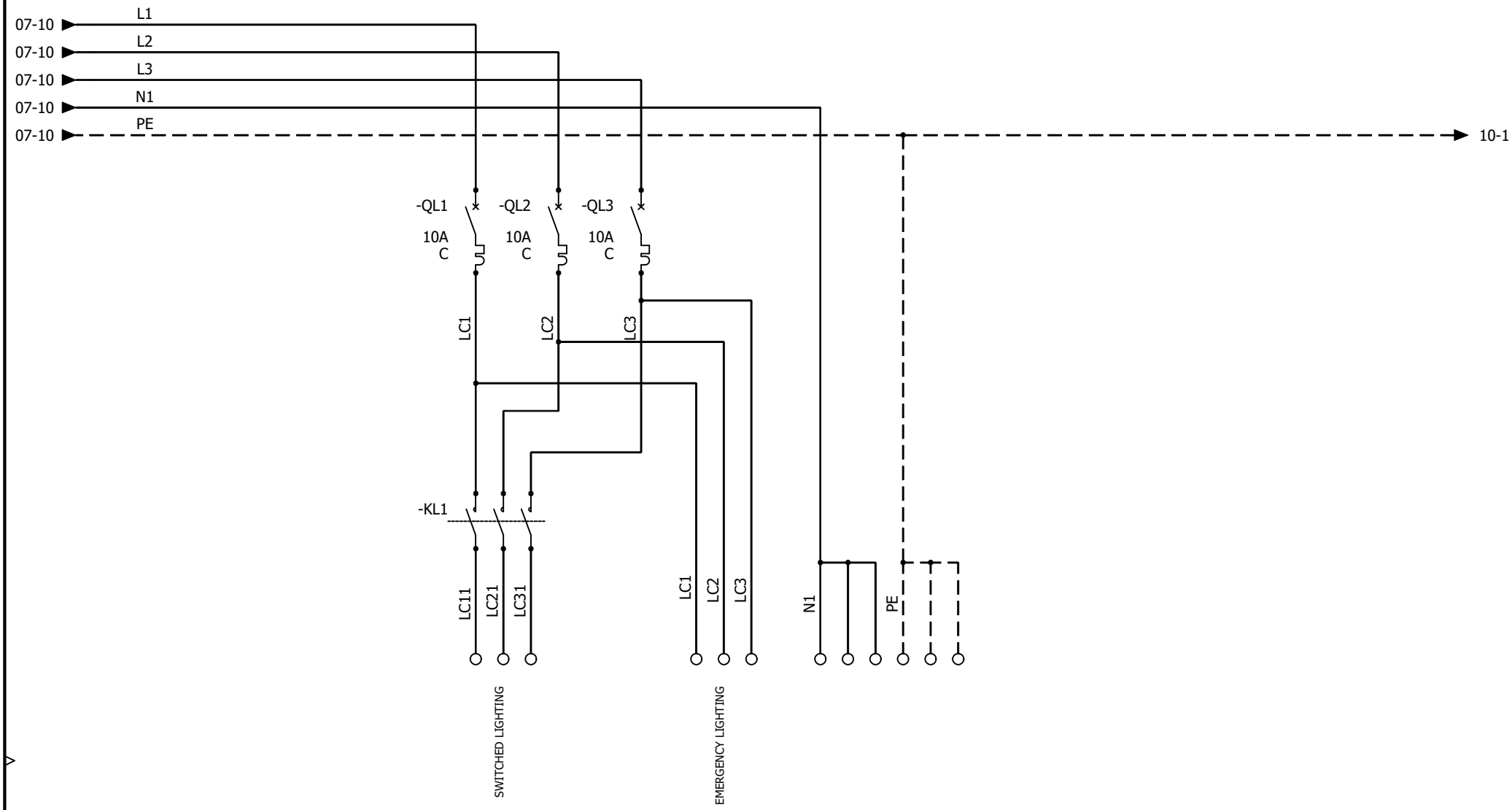

1	2	3	4	5	6	7	8	9	10

AAC Technical Services Ltd
Unit 2, Brunel Business Court
Brunel Way, Thetford, Norfolk IP24 1HP

SPRAY BOOTH
BOOTH LIGHTS

CONTRACT: AIRBLAST - BAE PORTSMOUTH - PAINTBOOTH PMR 2643

LOCATION: Main electrical closet

REV.	DATE	NAME	CHANGES
0	21/09/2026	TW	

User data 1

User data 2

REVISION 0

SCHEME 09

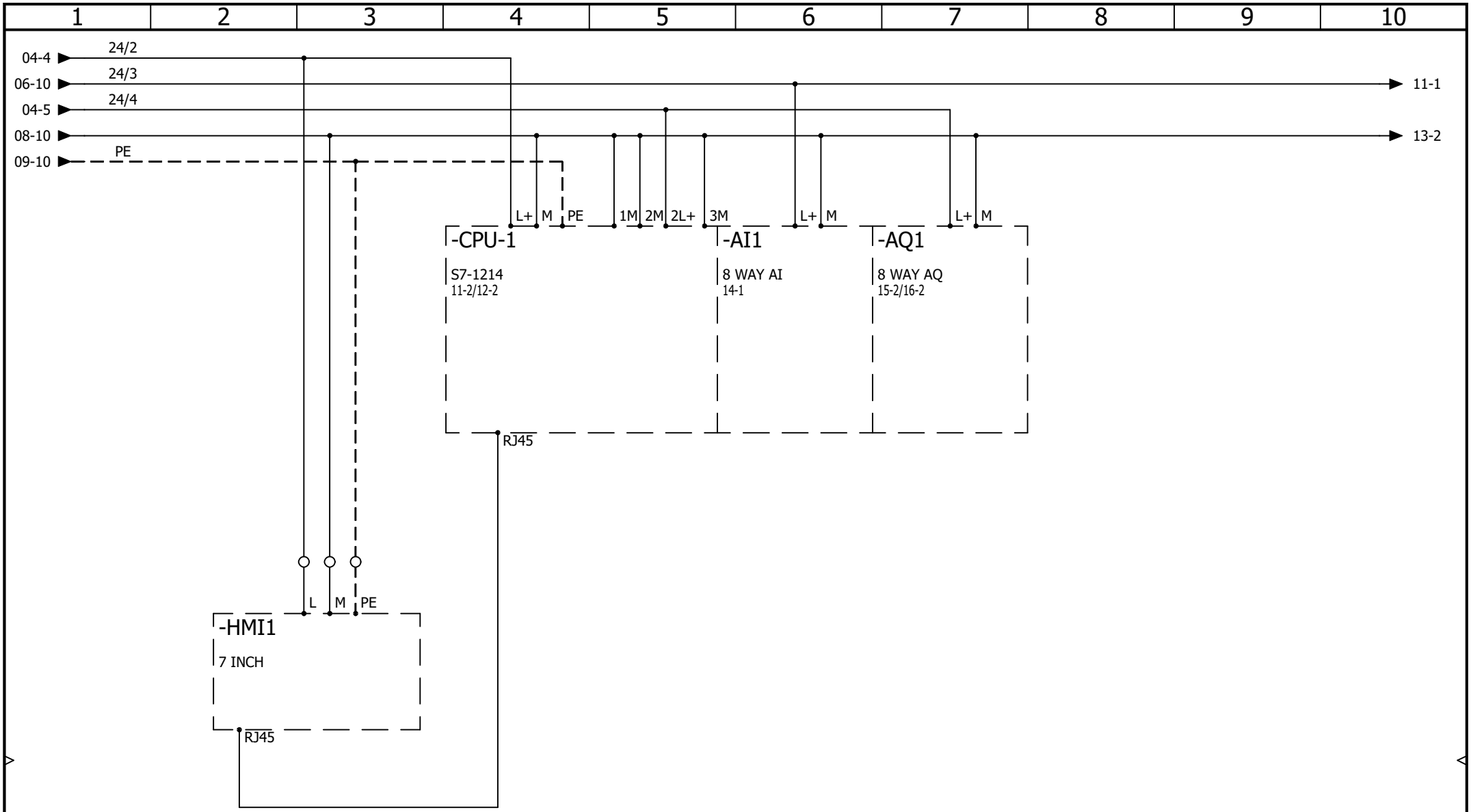

AAC Technical Services Ltd
Unit 2, Brunel Business Court
Brunel Way, Thetford, Norfolk IP24 1HP

SPRAY BOOTH

ETHERNET AND PLC CONFIGURATION

REV.	DATE	NAME	CHANGES
0	21/09/2026	TW	

User data 1

User data 2

REVISION 0

SCHEME 10

CONTRACT: AIRBLAST - BAE PORTSMOUTH - PAINTBOOTH PMR 2643

LOCATION: Main electrical closet

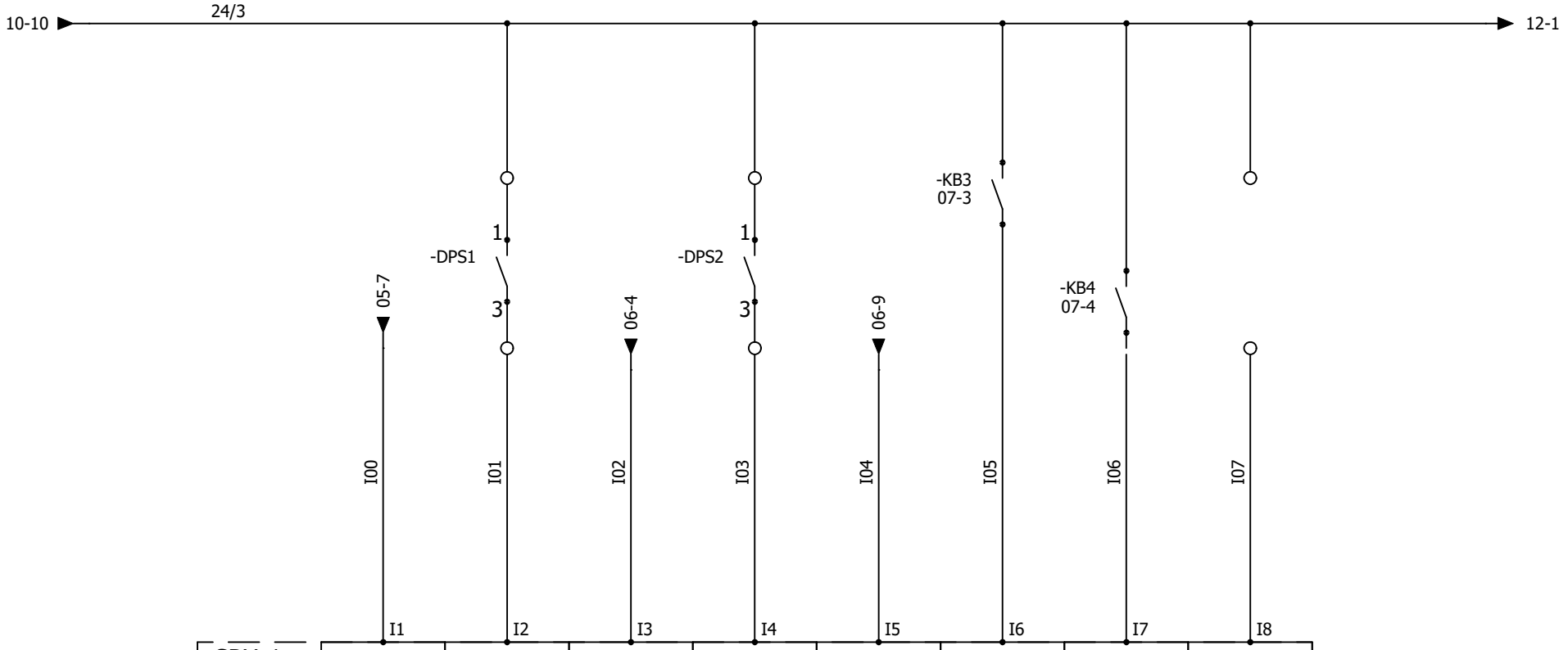

-CPU-1

S7-1214
10-4/12-2

I0	I1	I2	I3	I4	I5	I6	I7
EMERGENCY STOP ATIVATED	SUPPLY FAN DPS	SUPPLY FAN FAULT	EXTRACT FAN DPS	EXTRACT FAN FAULT	BURNER RUNNING	BURNER FAULT	SPARE

AAC Technical Services Ltd
Unit 2, Brunel Business Court
Brunel Way, Thetford, Norfolk IP24 1HP

SPRAY BOOTH
CPU INPUTS - 1

REV.	DATE	NAME	CHANGES
0	21/09/2026	TW	

REVISION 0

SCHEME 11

CONTRACT: AIRBLAST - BAE PORTSMOUTH - PAINTBOOTH PMR 26413

LOCATION: Main electrical closet

User data 1

User data 2

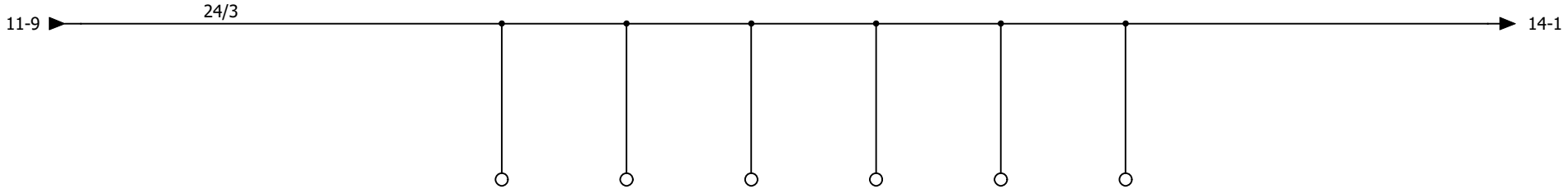

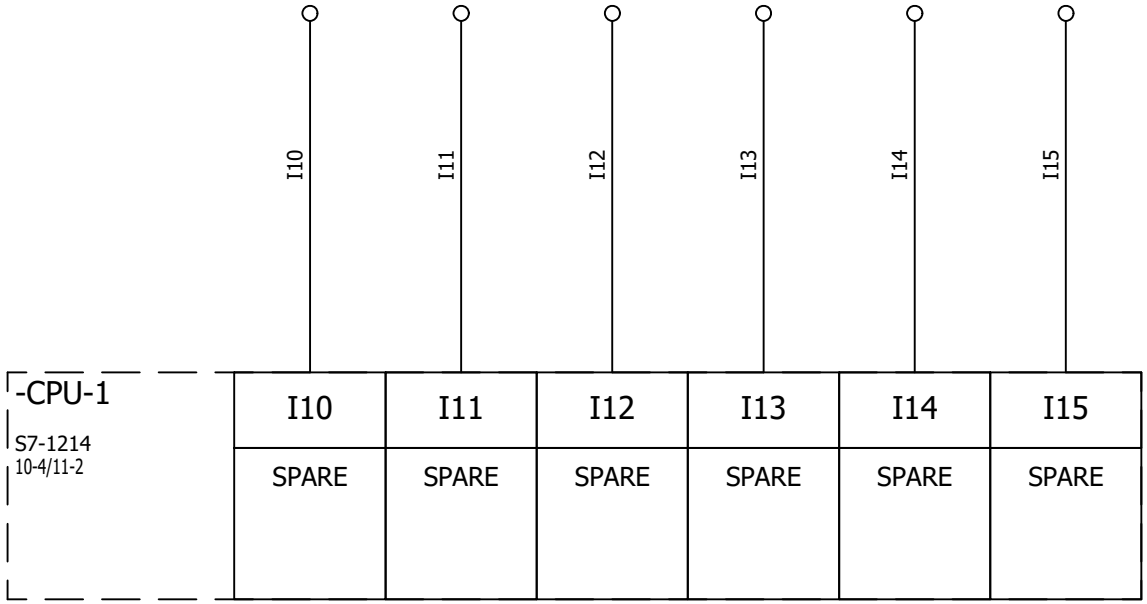

AAC Technical Services Ltd
Unit 2, Brunel Business Court
Brunel Way, Thetford, Norfolk IP24 1HP

SPRAY BOOTH
CPU INPUTS - 2

CONTRACT: AIRBLAST - BAE PORTSMOUTH - PAINTBOOTH PMR 2643

LOCATION: Main electrical closet

REV.	DATE	NAME	CHANGES
0	21/09/2026	TW	

User data 1

User data 2

REVISION 0

SCHEME 12

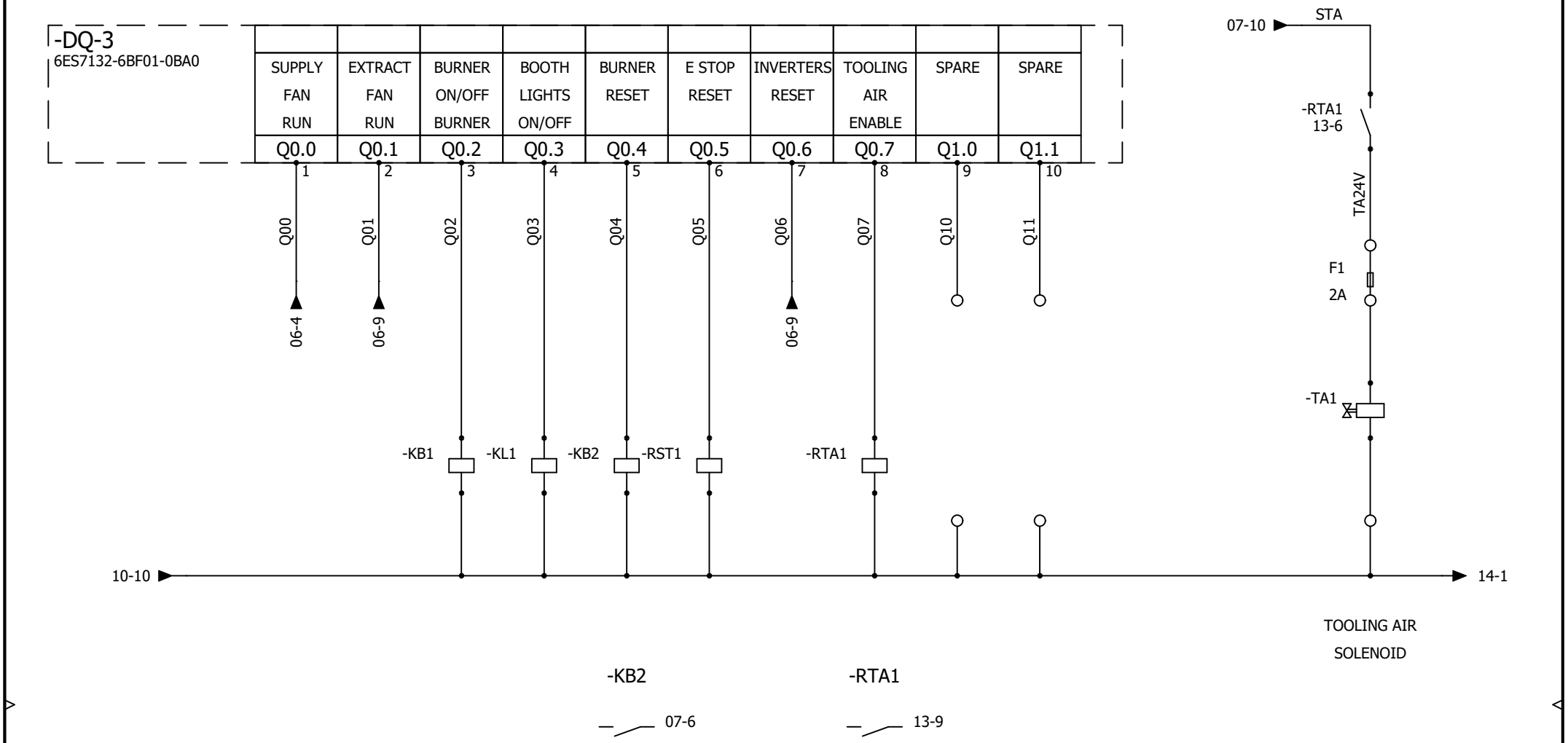

AAC Technical Services Ltd Unit 2, Brunel Business Court Brunel Way, Thetford, Norfolk IP24 1HP	SPRAY BOOTH CPU OUTPUTS	REVISION 0
CONTRACT: AIRBLAST - BAE PORTSMOUTH - PAINTBOOTH PMR 26431	LOCATION: Main electrical closet	SCHEME 13

REV.	DATE	NAME	CHANGES
0	21/09/2026	TW	

User data 1 | User data 2

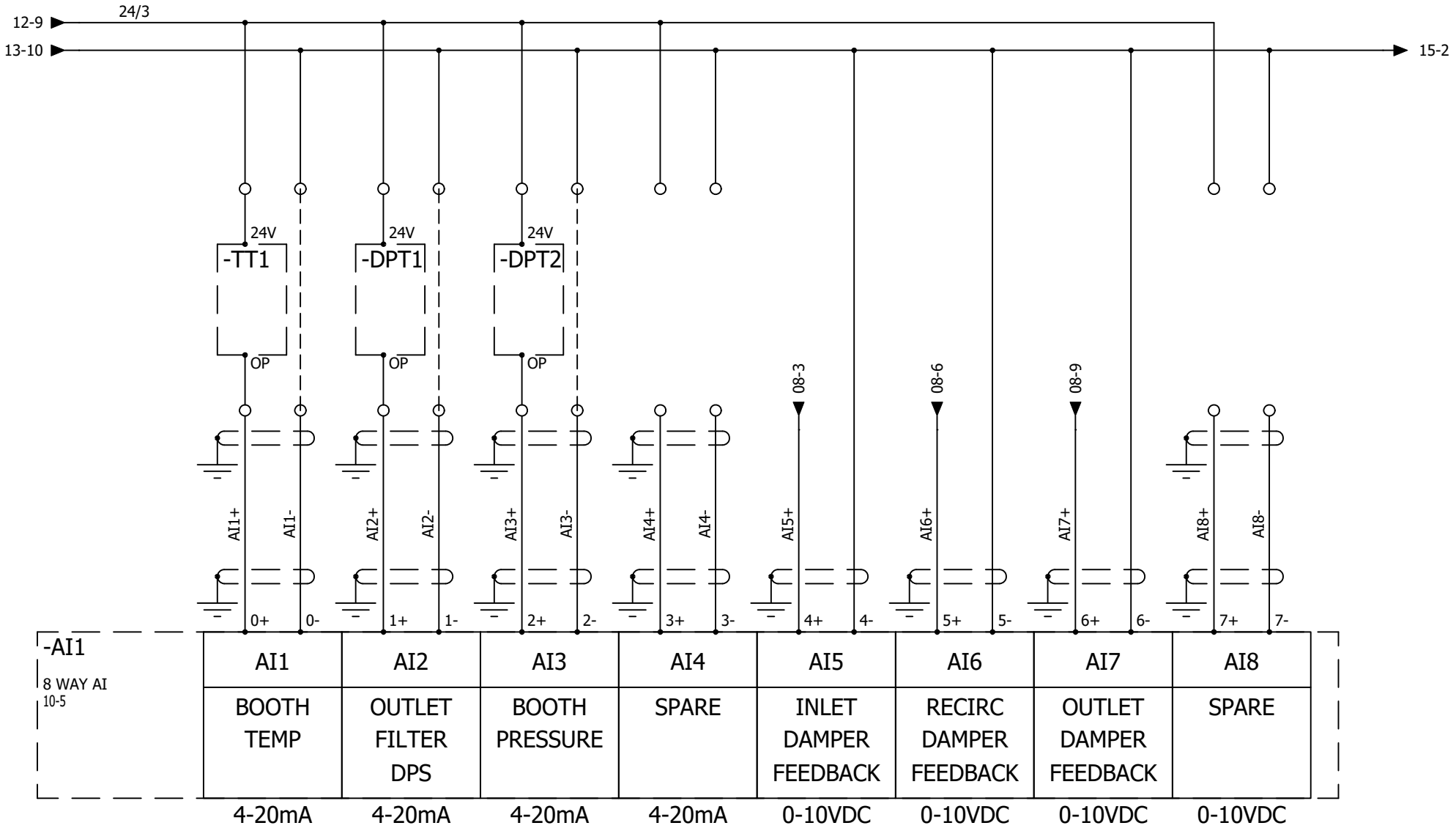

AAC Technical Services Ltd
Unit 2, Brunel Business Court
Brunel Way, Thetford, Norfolk IP24 1HP

SPRAY BOOTH
ANALOGUE INPUTS

REV.	DATE	NAME	CHANGES
0	21/09/2026	TW	

User data 1

User data 2

REVISION 0

SCHEME 14

CONTRACT: AIRBLAST - BAE PORTSMOUTH - PAINTBOOTH PMR 26431

LOCATION: Main electrical closet

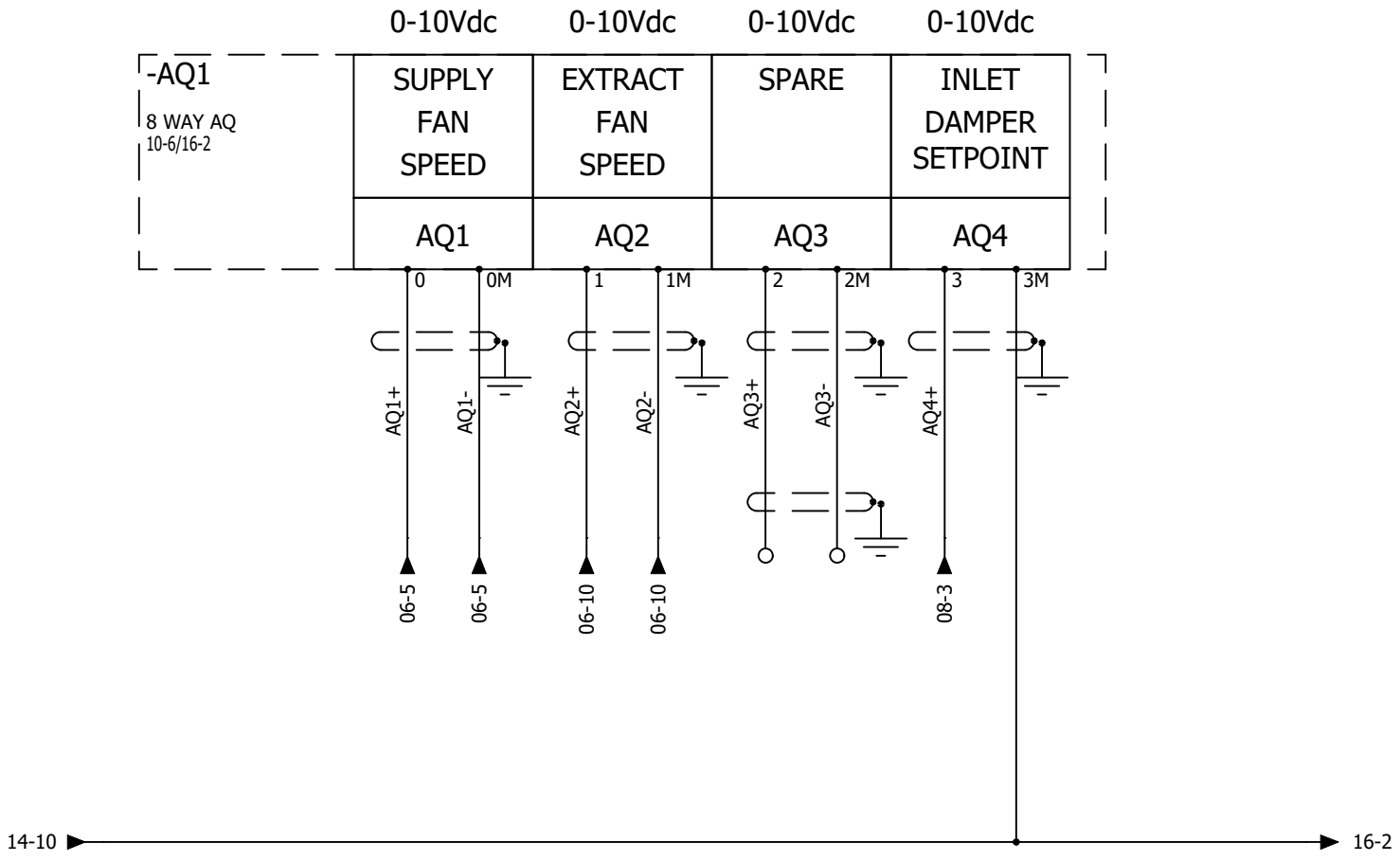

AAC Technical Services Ltd Unit 2, Brunel Business Court Brunel Way, Thetford, Norfolk IP24 1HP	SPRAY BOOTH ANALOGUE OUTPUTS - 1		REVISION 0
		0 / 21/09/2026 / TW / CHANGES	SCHEME 15
CONTRACT: AIRBLAST - BAE PORTSMOUTH - PAINTBOOTH PMR 2643	LOCATION: Main electrical closet	User data 1 / User data 2	

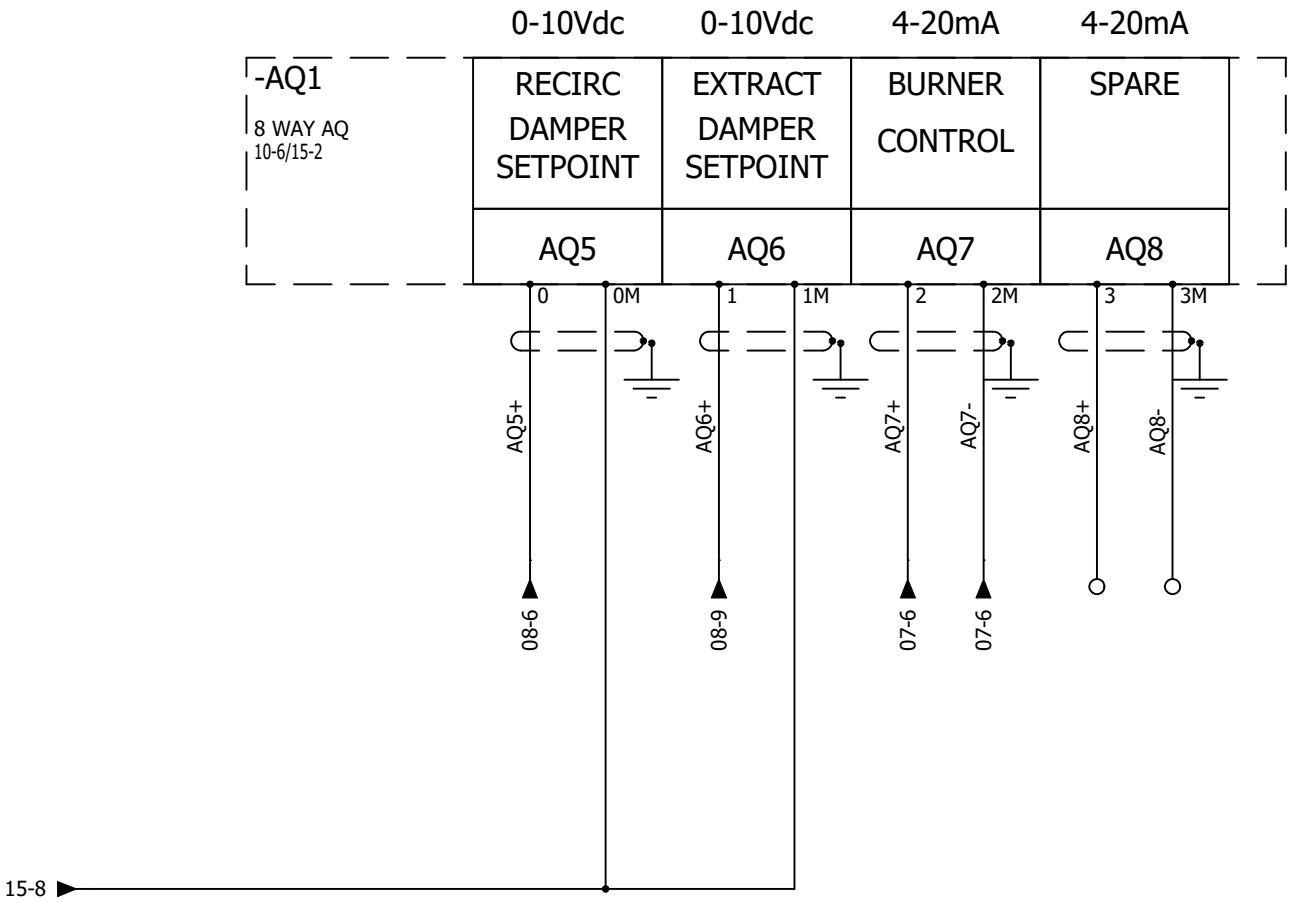

AAC Technical Services Ltd Unit 2, Brunel Business Court Brunel Way, Thetford, Norfolk IP24 1HP	SPRAY BOOTH ANALOGUE OUTPUTS - 2		REVISION 0
CONTRACT: AIRBLAST - BAE PORTSMOUTH - PAINTBOOTH PMR 2643	LOCATION: Main electrical closet	0 / 21/09/2026 / TW / CHANGES	SCHEME 16
		User data 1 / User data 2	